WP-630 FIXED BLADE LOUVER

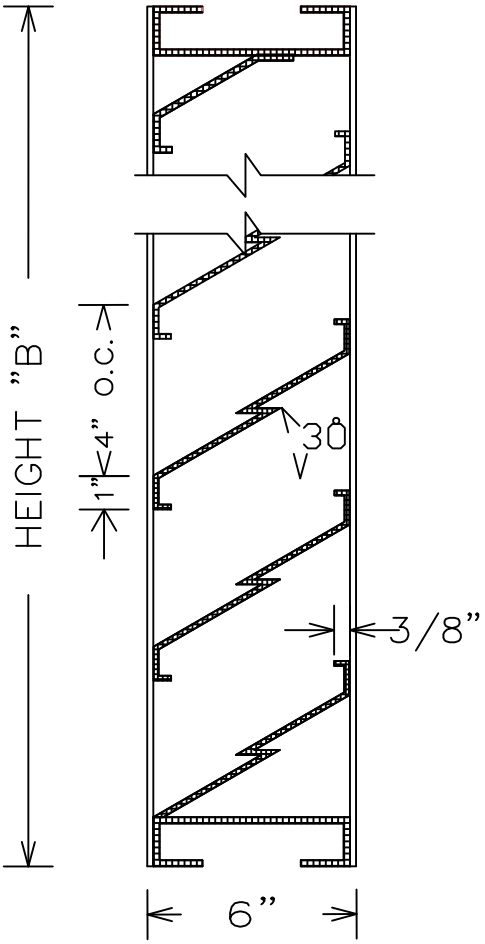

VERTICAL SECTION

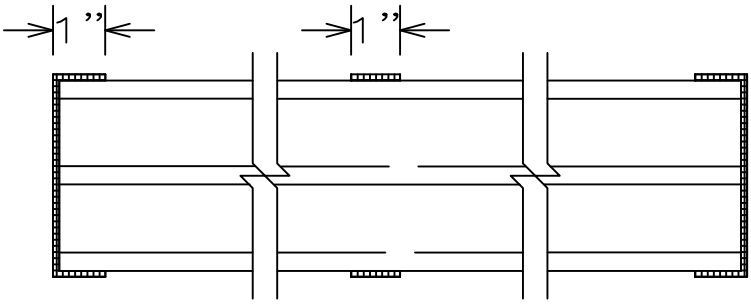

PLAN VIEW

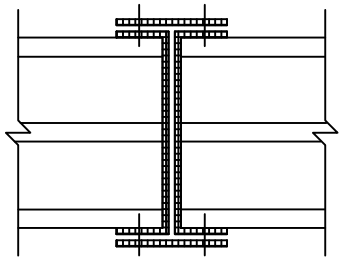

VERTICAL MULLION

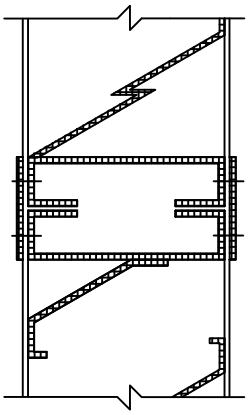

HORIZONTAL MULLION

LOUVERS TO BE 16 ga GALVANIZED STEEL, ALL WELDED CONSTRUCTED. MAXIMUM SINGLE SECTION SIZE NOT TO EXCEED 48" X 120" OR 40 SQUARE FEET MULLIONS TO BE SUPPLIED WHERE WIDTH IS GREATER THAN 48".

ITEM	QTY.	DIMENSIONS				FINISHES	FEATURES
		OPENING		LOUVER		☐ NATURAL	
		A	B	A	B	☐ PRIME COAT	
						☐ BAKED ENAMEL	
						☐ CLEAR ANODIZED	
						☐ COLOR ANODIZED	
						☐ KYNAR	
						☐ OTHER (SPECIFY)	
						SCREEN ☐ INTERIOR ☐ EXTERIOR	
						☐ STANDARD ☐ GALV.	
						☐ 18 X 14 MESH INSECT ☐ ALUM.	
						☐ 1/4" MESH BIRD ☐ OTHER	
						☐ 1/2" MESH BIRD	
						☐ OTHER (SPECIFY)	

PROJECT:

LOCATION:

CUSTOMER:

DATE

CONTROL NO.

SHEET OF

LOUVERS & DAMPERS

WONDER METALS CORP. REDDING CALIFORNIA