L-645 FIXED BLADE LOUVER

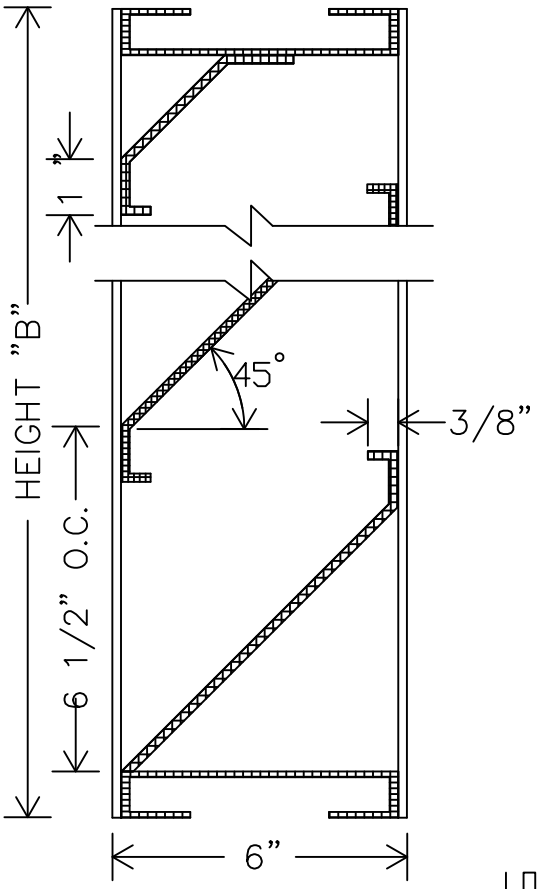

VERTICAL SECTION

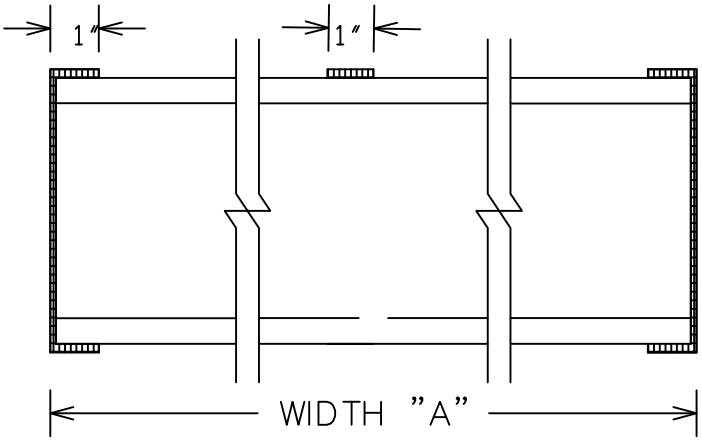

PLAN VIEW

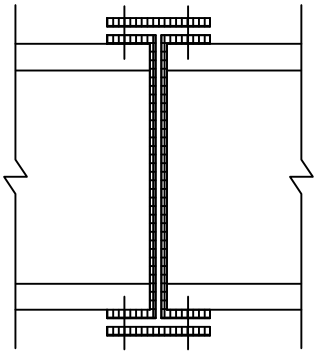

VERTICAL MULLION

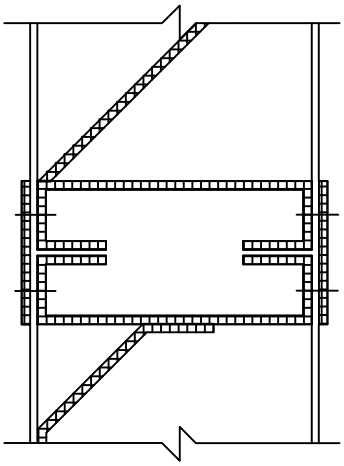

HORIZONTAL MULLION

LOUVERS TO BE 16 GA. GALVANIZED STEEL, ALL WELDED CONSTRUCTED. MAXIMUM SINGLE SECTION SIZE NOT TO EXCEED 48" X 120" OR 40 SQUARE FEET. MULLIONS TO BE SUPPLIED WHERE WIDTH IS GREATER THAN 48". FREE AREA: 43%

ITEM	QTY.	DIMENSIONS				FINISHES	FEATURES
		OPENING		LOUVER		☐ MILL	
		A	B	A	B	☐ PRIME COAT	
						☐ BAKED ENAMEL	
						☐ CLEAR ANODIZED	
						☐ COLOR ANODIZED	
						☐ KYNAR	
						☐ OTHER (SPECIFY)	
						SCREEN ☐ INTERIOR ☐ EXTERIOR	
						☐ 18 X 14 MESH INSECT	☐ GALV.
						☐ 1/4" MESH BIRD	☐ ALUM.
						☐ 1/2" MESH BIRD	☐ STAINLESS
						☐ OTHER (SPECIFY)	☐ OTHER

PROJECT:
LOCATION:
CUSTOMER:

DATE:
CONTROL NO:
SHEET OF

PHONE (800) 366-5877 www.wondermetals.com FAX (530) 241-1738

LOUVERS & DAMPERS

WONDER METALS CORP.

REDDING CALIFORNIA